RAM, S900 Casement

REVISIONS				
ZONE	REV	DESCRIPTION	DATE	APPROVED

DRAWING APPROVAL

- ☐ APPROVED
- ☐ APPROVED AS NOTED
- ☐ REVISE AND RESUBMIT

SIGN _____ DATE _____

Please return one print set marked with your signature, any comments, and notation of approval for fabrication.

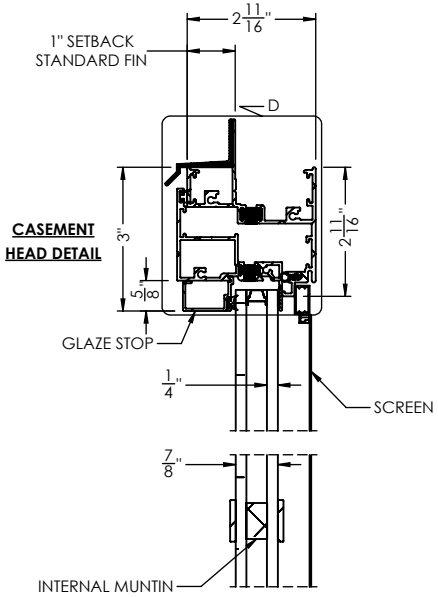

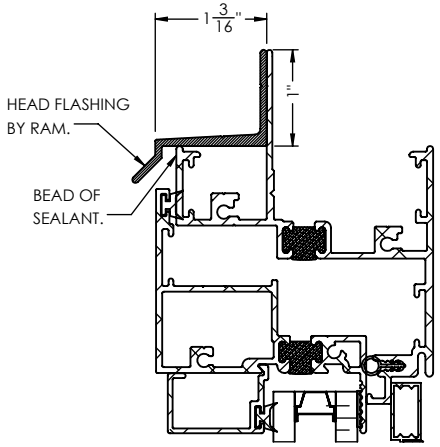

DETAIL D
SCALE 1 : 2

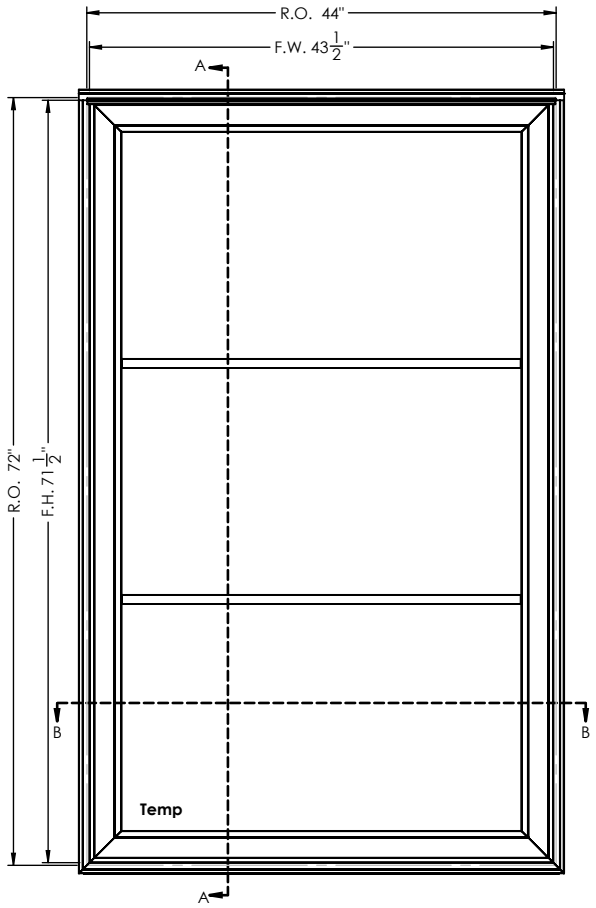

NOTE:
HEAD FLASHING BY RAM,
SILL PAN BY OTHERS.

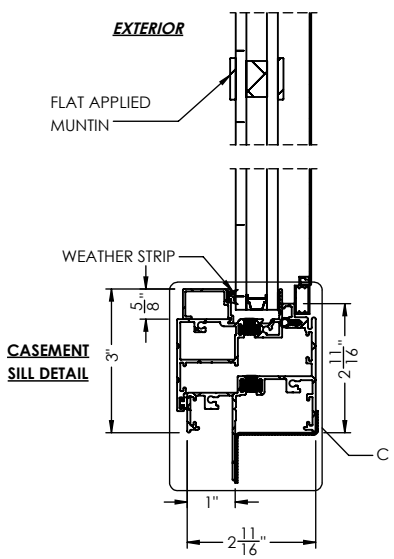

SECTION A-A
SCALE 1 : 4

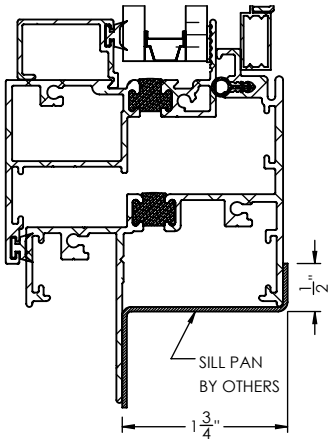

DETAIL C
SCALE 1 : 2

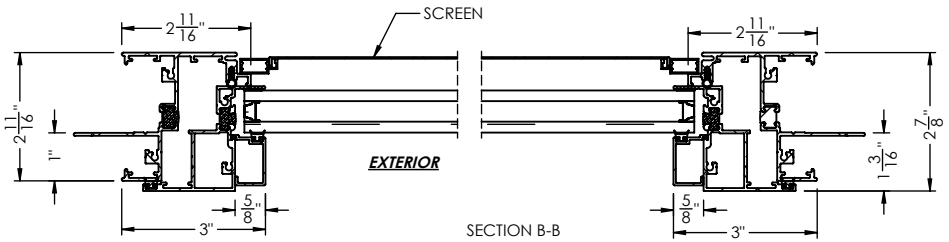

CASEMENT
LEFT JAMB DETIAL

SECTION B-B
SCALE 1 : 4

CASEMENT
RIGHT JAMB DETIAL

PROPRIETARY AND CONFIDENTIAL

THE INFORMATION CONTAINED IN THIS DRAWING IS THE SOLE PROPERTY OF RAM WINDOWS & DOORS. ANY REPRODUCTION IN PART OR AS A WHOLE WITHOUT THE WRITTEN PERMISSION OF RAM WINDOWS & DOORS IS PROHIBITED.

RAM WINDOWS & DOORS

LEAD TIME		CUSTOMER	
GLASS WARRANTY		PROJECT	
FRAME WARRANTY		CITY	Houston
FINISH WARRANTY		STATE	TX
U-FACTOR		OUTER GLASS	1/8" Cardinal 366 Lo-E (Temp)
SHGC		AIR SPACE	5/8" Argon
OA GLASS THICKNESS	7/8"	INNER GLASS	1/8" Clear

UNLESS OTHERWISE SPECIFIED: DIMENSIONS ARE IN INCHES TOLERANCES:

FRACTIONAL: ± 1/16
ANGULAR: MACH/BEND: ± 1
TWO PLACE DECIMAL ± 0.01
THREE PLACE DECIMAL ± 0.005

MATERIAL:

DO NOT SCALE DRAWING

	NAME	DATE
DRAWN	CG	2/19/2025
ENG	R.W	
MARK		
QTY.		
FINISH	Clear Anodized	
DP	CW40	
SCALE: 1:18		

RAM WINDOWS AND DOORS

TITLE:

SIZE	WTS NUMBER	REV
A	Casement LW-CSMT Assembly	
	WEIGHT: 156.14	SHEET 1 OF 1